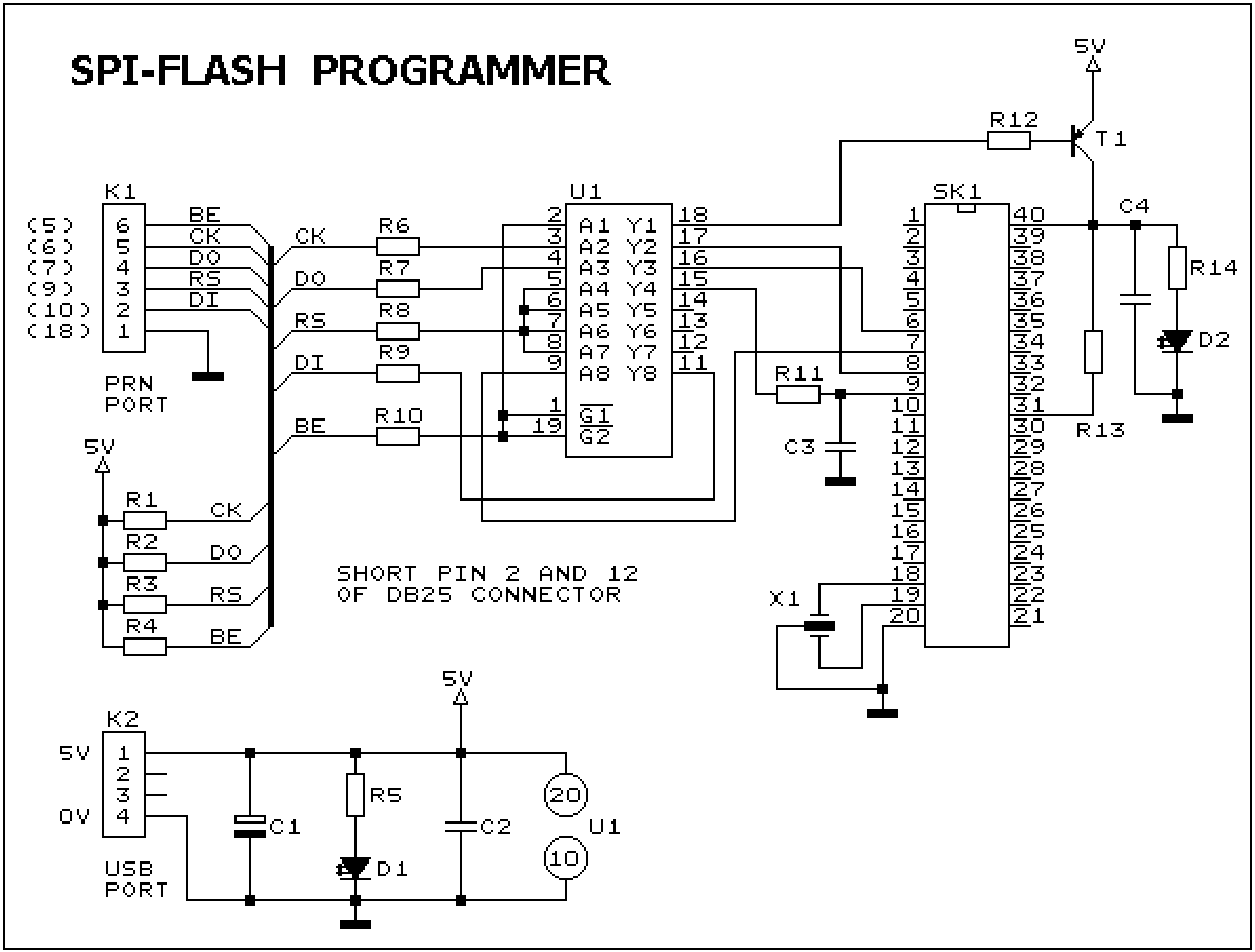SPI-FLASH PROGRAMMER