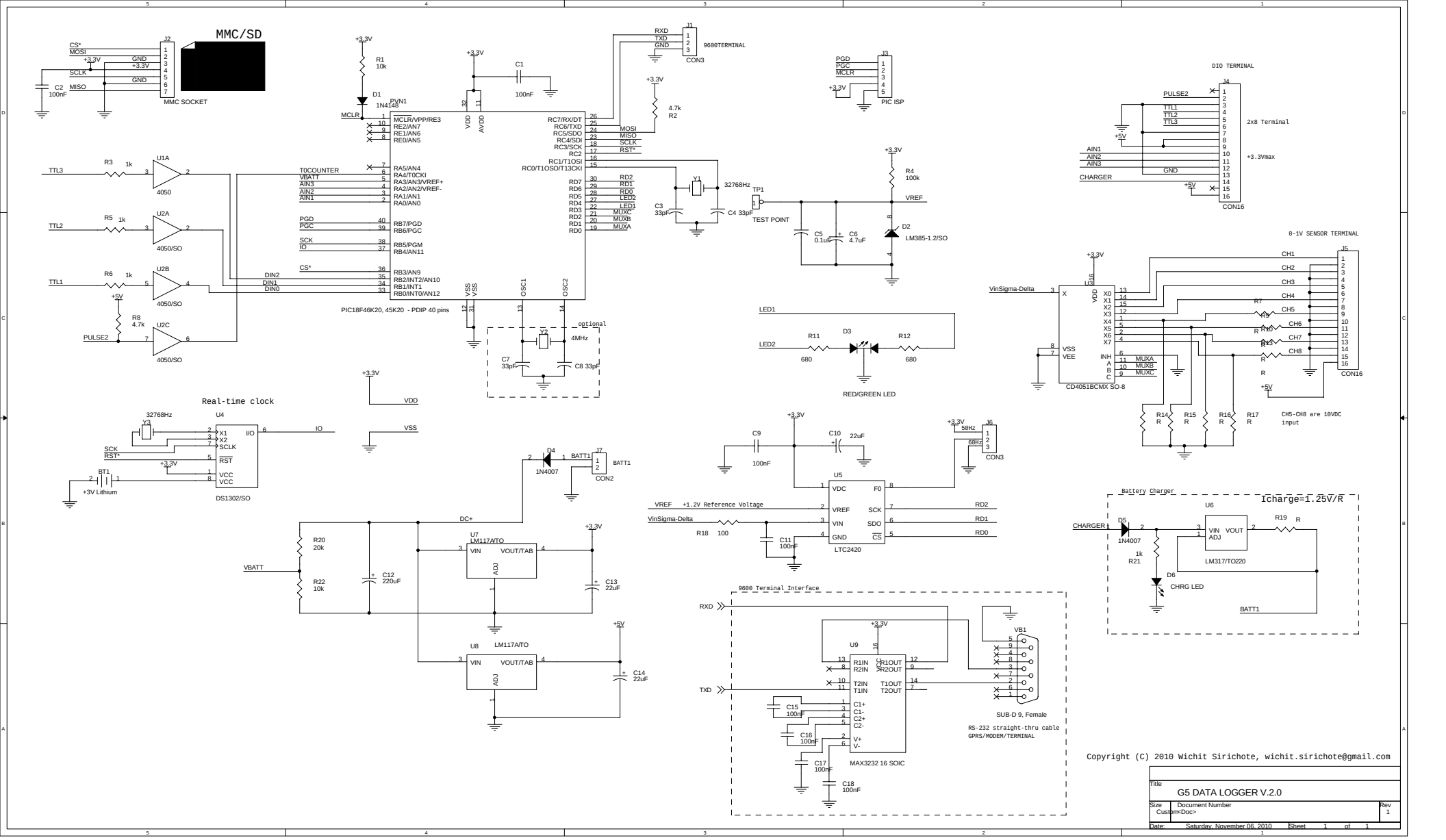

Copyright (C) 2010 Wichit Sirichote, wichit.sirichote@gmail.com

Title	G5 DATA LOGGER V.2.0	
Size Custom<Doc>	Document Number	Rev 1
Date: Saturday, November 06, 2010	Sheet 1 of 1	