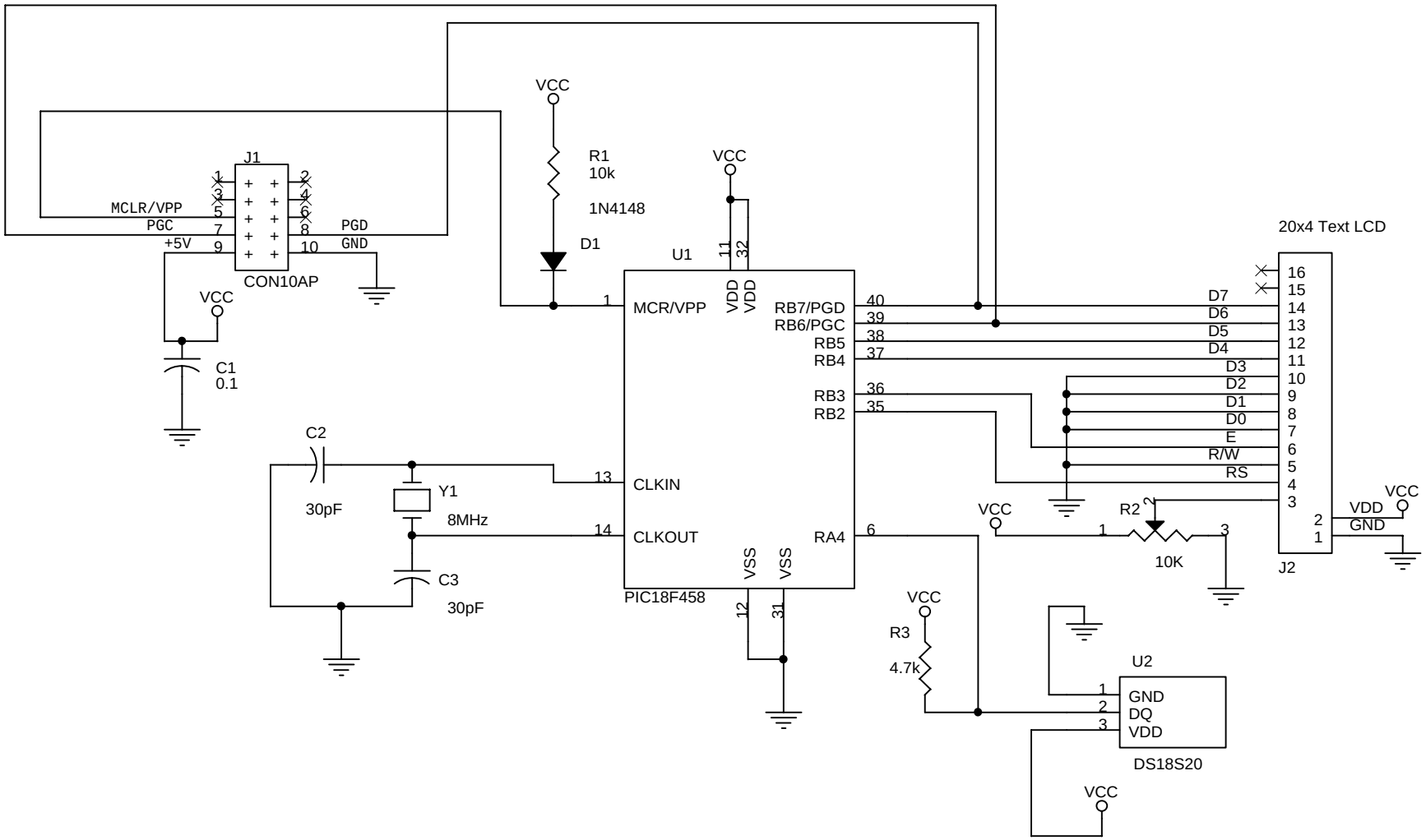

Title	TEST BOARD PIC18F458+DS1820+LCD	
Size A	Document Number <Doc>	Rev 1
Date: Friday, November 03, 2006	Sheet 1 of 1	