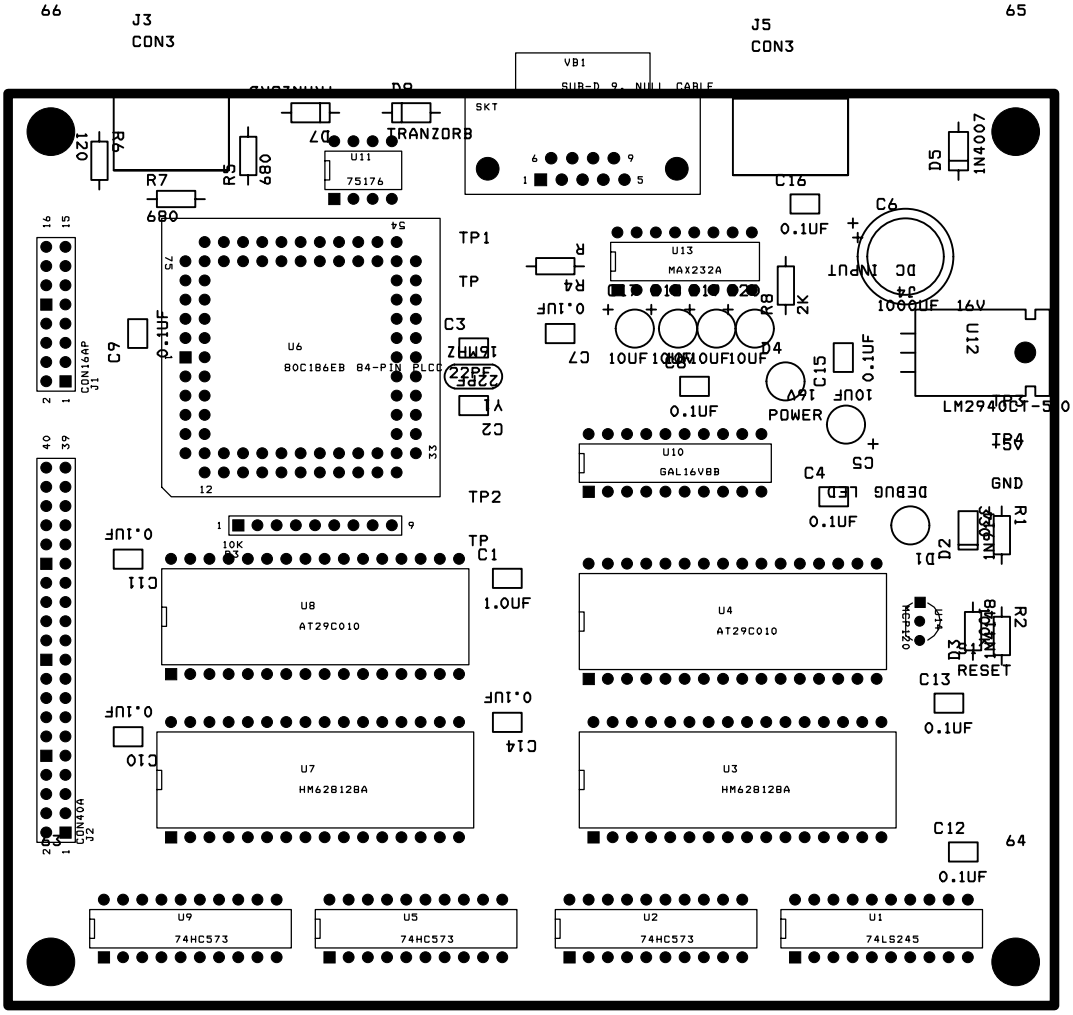
66
65
64
J3
CON3
J5
CON3
VB1
SUB-D 9, NULL CABLE
SKT
D8
TRANZORB
D7
U11
75176
R6
120
R5
680
R7
680
D5
1N4007
C16
0.1UF
C6
DC INPUT
J4
1000UF 16V
U12
LM2940CT-5.0
U13
MAX232A
R8
2K
D4
POWER
C15
0.1UF
10UF
C5
C8
10UF
C7
10UF
C9
0.1UF
R4
0.1UF
TP1
TP
C3
15MHZ
22PF
Y1
C2
U6
80C186EB 84-PIN PLCC
CON16AP
J1
CON40A
J2
U10
GAL16V8B
C4
0.1UF
LED
DEBUG
D1
D2
1N4007
R1
470
GND
TP2
TP
C1
1.0UF
10K
C11
0.1UF
U8
AT29C010
U4
AT29C010
D3
RESET
R2
470
C13
0.1UF
C10
0.1UF
C14
0.1UF
U7
HM628128A
U3
HM628128A
C12
0.1UF
U9
74HC573
U5
74HC573
U2
74HC573
U1
74LS245